DC Capacitors

02:32 h

Discussion outline

Learning outcomes

After completing this section, you will be able to:

- Explain the principles of operation of dc capacitors.
- Explain the importance of the capacitance and voltage ratings of a capacitor.
- Measure capacitance using a capacitance meter.
- Calculate the capacitance of series and parallel capacitors.
- Explain the principles of operation of resistor-capacitor (RC) circuits, both during charging and discharging.
- List applications of capacitors.
- Operate a component of the AC/DC Training System: the dc capacitor.

The discussion of the present exercise covers the following points:

- Introduction to dc capacitors
- Operation of dc capacitors
- Capacitance and voltage rating of dc capacitors
- Capacitance measurement using a capacitance meter
- Calculating the capacitance of series and parallel capacitors
- Resistor-capacitor (RC) circuits
- Applications of dc capacitors
- Training system component: the capacitor

© Festo Didactic

Introduction to dc capacitors

All electrical circuits studied so far contained components that were almost exclusively resistive. This means that all these components used almost all power supplied to them to produce work, the nature of this work depending on the component type. However, other types of components exist, such as the component we will now study, the capacitor.

Capacitors are commonly found in dc circuits. Contrary to resistors, almost all the power supplied to a capacitor is not used to produce any immediate work. Instead, the main properties of dc capacitors are to oppose voltage changes in a circuit and store electrical energy. The electrical diagram symbol for a capacitor is shown in the following table.

Table 19: Capacitor symbol.

Component	Symbol
Capacitor	

Operation of dc capacitors

To visualize the operation of dc capacitors, consider the circuit in (a) of the following figure consisting of a dc power source connected to an open toggle switch and a capacitor. (b) of the figure shows the same capacitor in more detail. As illustrated, most capacitors consist of two conducting materials (usually a metal) separated by an insulating material, called a dielectric (e.g., glass, air, paper). A pair of terminals on the capacitor provides access to the metal plates. In a discharged capacitor, the polar molecules in the dielectric have random orientations as shown in the figure.

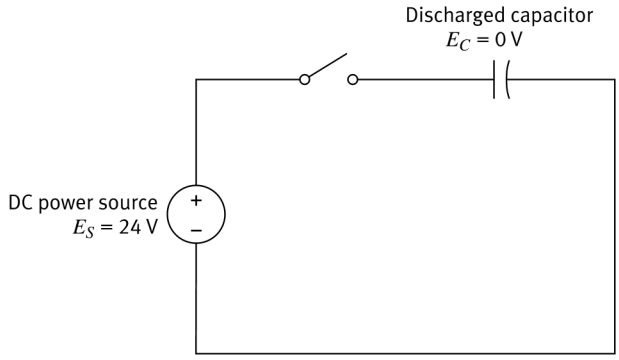

(a) DC power source connected to an open toggle switch and a discharged capacitor

© Festo Didactic

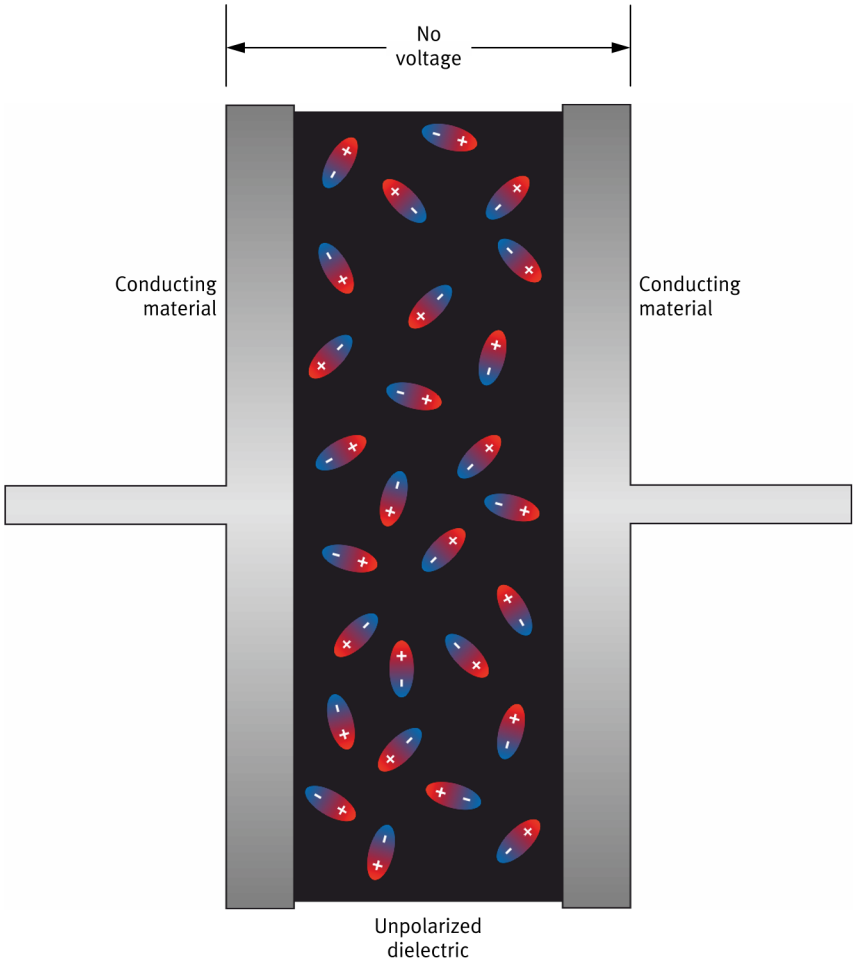

(b) Discharged capacitor showing the random orientation of the polar molecules in the dielectric

Figure 140: DC power source connected to an open toggle switch and a discharged capacitor with details of the capacitor.

When the toggle switch controlling the circuit is closed as in (a) of the following figure, a voltage is applied to the capacitor. This creates a potential difference between the conducting materials of the capacitor. The conducting material on the positive terminal side of the power source becomes positive; while the conducting material on the negative terminal side becomes negative (a voltage builds up across the terminals of the capacitors). This, in turn, causes the polar molecules in the dielectric to align with the electric field between the plates. The negative portions of the polar molecules align toward the positively charged plate and the positive portions of the molecules align toward the negatively charged plate, as shown in (b) of the following figure. Adding a dielectric between the two plates decreases the effective electric field between the plates, which increases the capacitance of the capacitor. When the voltage across the capacitor becomes equal to the dc power source voltage, the capacitor is fully charged.

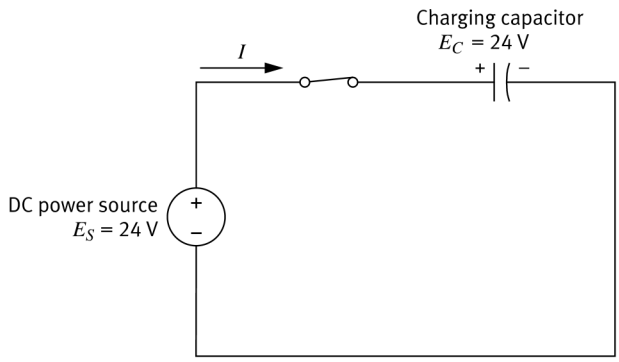

(a) DC power source connected to a closed toggle switch and a charging capacitor

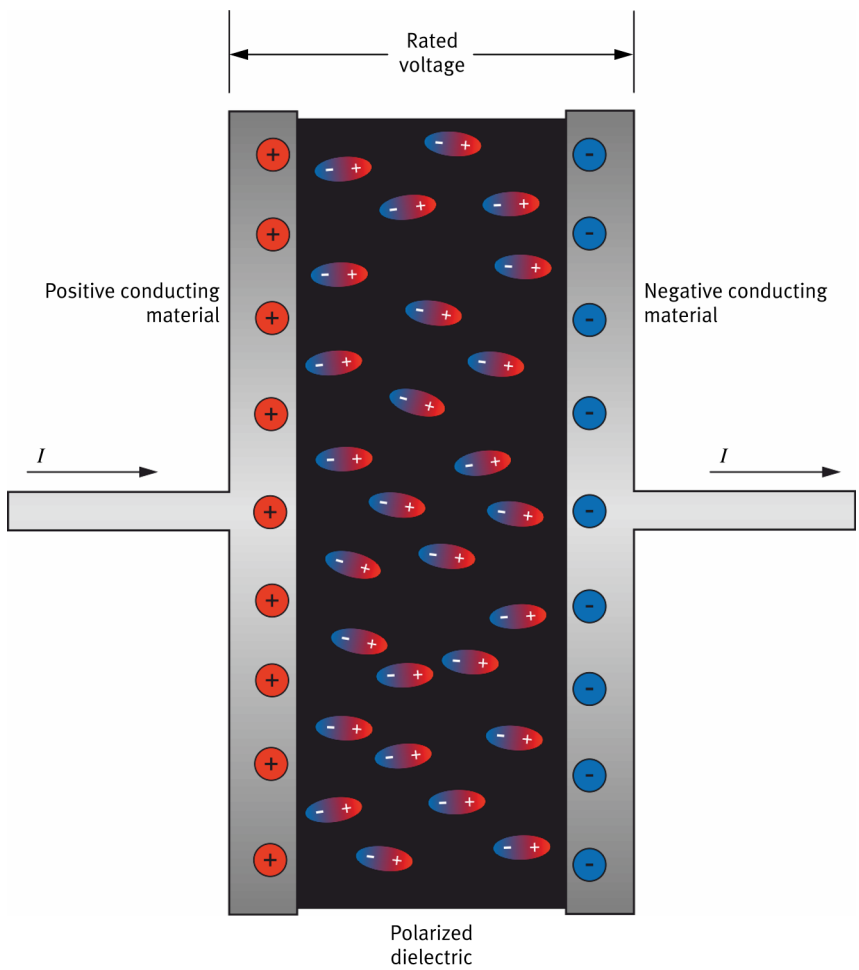

(b) Charged capacitor showing the polar molecules aligned in the dielectric

Figure 141: DC power source charging a capacitor with details of the capacitor.

© Festo Didactic

In theory, when a capacitor is fully charged, it remains so even if it is disconnected from the power source. However, in practice, the voltage across a capacitor that is not connected to a power source decreases with time. This property of capacitors is referred to as capacitor leakage or self-discharge. Some capacitors are able to retain their charge longer than others.

Therefore, if the toggle switch in (a) of Figure 141 is opened after the capacitor is fully charged, a voltage equal to that of the dc power source will still remain across the capacitor. This voltage, however, decreases with time. When the capacitor is connected to a resistor and the toggle switch closed, as in Figure 142, the capacitor acts as a dc power source of 24 V and supplies power to the resistor. Since the capacitor charge is limited, it will quickly discharge itself and its voltage will decrease once again to 0 V. Once the capacitor is discharged, current no longer flows in the circuit.

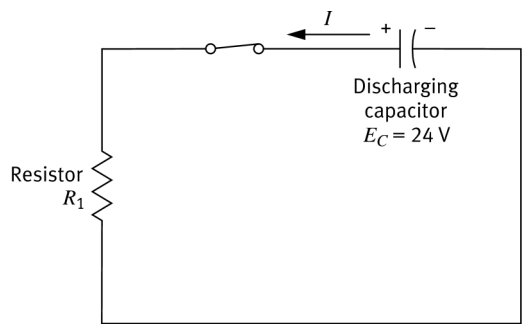

Figure 142: Discharging capacitor connected to a closed toggle switch and a resistor.

Capacitance and voltage rating of dc capacitors

The fundamental characteristic of a dc capacitor is its capacitance, which measures its ability to store an electrical charge. The higher the capacitance, the higher the charge it can store. Capacitance is measured in farads (F), usually in microfarads (µF), after English scientist Michael Faraday, who made significant discoveries in the domains of electromagnetism and electrochemistry. Capacitance is usually denoted using the letter C.

Figure 143: English scientist Michael Faraday.

Just like resistors, capacitors have a certain tolerance, which indicates by how much their capacitance can vary from the nominal rating. The tolerance of a capacitor is generally expressed as a percentage of its nominal capacitance, and can be low or high depending on the precision of the capacitor.

Another important characteristic of a capacitor is its voltage rating, also called working voltage. This value specifies the maximal voltage that should be applied to the capacitor. If a higher voltage is applied to the capacitor, the conducting plates could deform and let current flow through the capacitor. Another potential hazard is charging a capacitor beyond its capacity. Remember that a capacitor charges until the voltage across its terminals reaches the same value as the voltage of the dc power source. Therefore, if a 12 V capacitor is connected to a 24 V dc power source, the capacitor will charge until its voltage reaches 24 V (unless its metal plates deform prior to that). This could surcharge the capacitor and cause it to explode, which could cause serious injuries and damage surrounding equipment.

Capacitance measurement using a capacitance meter

Capacitance is measured using a capacitance meter. Just like a voltmeter and an ohmmeter, a capacitance meter measures the capacitance between two points in a circuit. Because of this, it is necessary to connect the capacitance meter across (i.e., in parallel with) the two points where capacitance is to be measured, such as across the terminals of a capacitor, for example. This is shown in the following figure. In the figure, the capacitor has a capacitance of 16 µF. Therefore, when a capacitance meter is connected in parallel with the capacitor, it indicates a capacitance of 16 µF.

Most capacitance meters operate by making a small current flow through the component under test, then measuring the rate of increase of the voltage building up across the component. The faster the increase in voltage, the greater the capacitance. Due to its mode of operation, it is very important to use a capacitance meter only in circuits whose power source is removed or turned off. Doing otherwise could seriously damage the capacitance meter, as well as providing inaccurate measurements.

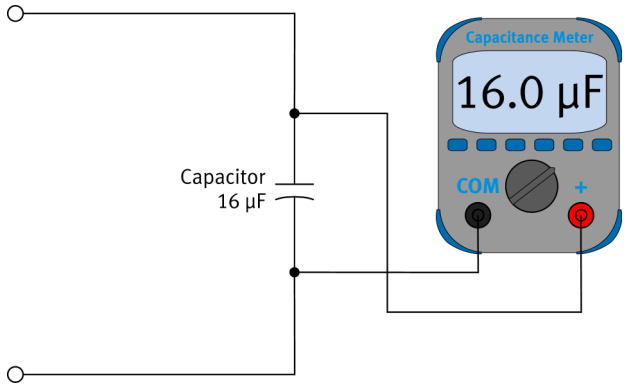

Figure 144: Using a capacitance meter to measure the capacitance of a capacitor.

Just as all other components in an electrical circuit, capacitance meters have a circuit diagram symbol. The symbol shown in the following table is used in this manual to represent a capacitance meter.

© Festo Didactic

Table 20: Capacitance meter symbol.

Component	Symbol
Capacitance meter	C

Representing the capacitance meter in Figure 144 using its circuit diagram symbol results in the following circuit.

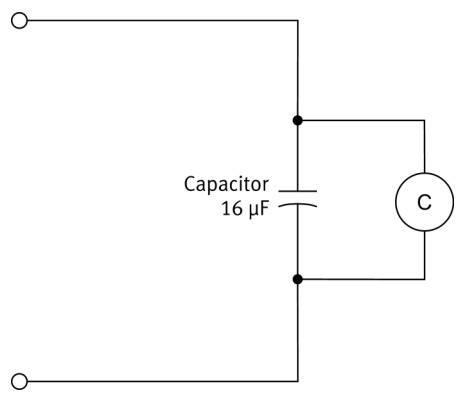

Figure 145: Using a capacitance meter to measure the capacitance of a capacitor.

Calculating the capacitance of series and parallel capacitors

Just as for resistors, it often happens that multiple capacitors are connected in series or in parallel. In that case, it is important to be able to calculate the equivalent capacitance of these capacitors. When capacitors are connected in series, the equivalent capacitance of the capacitors can be calculated so:

$$\frac{1}{C_{eq}} = \frac{1}{C_1} + \frac{1}{C_2} + \cdots + \frac{1}{C_n} \tag{5}$$

where C_{eq} is the equivalent capacitance of all capacitors in the series circuit, expressed in farads (F)

C_n is the capacitance of each capacitor in the circuit, expressed in farads (F)

When capacitors are connected in parallel, the equivalent capacitance of the capacitors can be calculated so:

$$C_{eq} = C_1 + C_2 + \cdots + C_n \tag{6}$$

where C_{eq} is the equivalent capacitance of all capacitors in the parallel circuit, expressed in farads (F)

C_n is the capacitance of each capacitor in the circuit, expressed in farads (F)

Consider for example the mixed circuit containing three capacitors shown in the following figure.

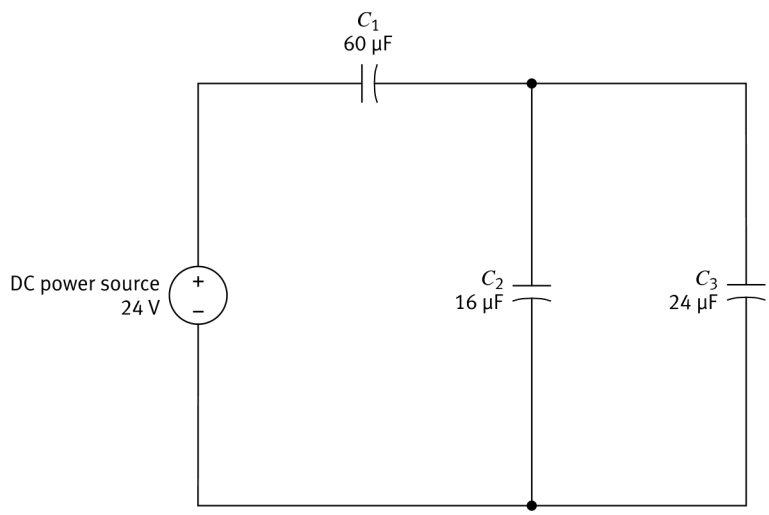

Figure 146: Mixed circuit containing three capacitors.

As the figure shows, C_2 and C_3 are connected in parallel. Their equivalent capacitance $C_{eq(C_2,C_3)}$ can thus be calculated, allowing us to replace these capacitors with a single capacitor whose capacitance is equal to the equivalent capacitance calculated below:

$$C_{eq(C_2,C_3)} = C_2 + C_3 = 16\ \mu\text{F} + 24\ \mu\text{F} = 40\ \mu\text{F}$$

The circuit in the preceding figure can then be simplified to the circuit in the following figure.

© Festo Didactic

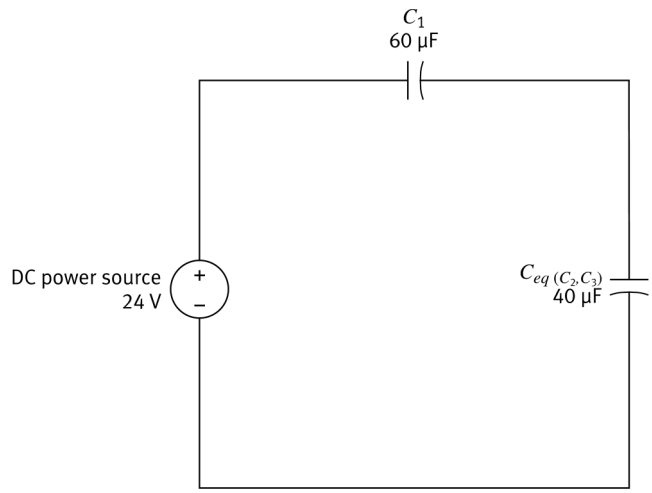

Figure 147: Simplification of the circuit in the preceding figure.

We now observe that C_1 and $C_{eq(C_2,C_3)}$ are connected in series. Their equivalent capacitance $C_{eq(C_1,C_2,C_3)}$ can thus be calculated, allowing us to replace these capacitors with a single capacitor whose capacitance is equal to the equivalent capacitance calculated below:

$$1/C_{eq(C_1,C_2,C_3)} = 1/C_1 + 1/C_{eq(C_2,C_3)} = 1/(60\ \mu\text{F}) + 1/(40\ \mu\text{F})$$

$$C_{eq(C_1,C_2,C_3)} = 24\ \mu\text{F}$$

The circuit in the preceding figure can then be simplified to the circuit in the following figure.

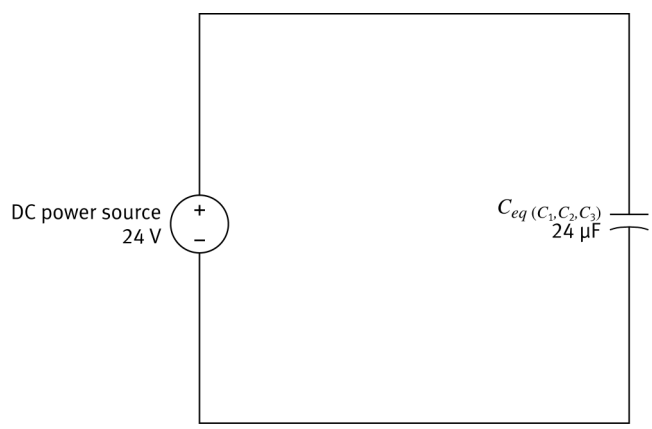

Figure 148: Simplification of the circuit in the preceding figure.

Resistor-capacitor (RC) circuits

Charging the RC circuit

As seen previously, applying a voltage across a capacitor causes current to flow in the circuit and a voltage to build up across the capacitor. Once this voltage increases up to the dc power source voltage, current stops flowing in the circuit and the capacitor is fully charged.

Fully charging a capacitor in this way requires a certain amount of time. In certain applications, varying the time required to charge the capacitor can be useful. This can be achieved by connecting a resistor to the capacitor in order to vary the intensity of the current flowing in the capacitor and thus the speed at which the capacitor charges. A switch is often added to the circuit to control the charge. This is shown in the following figure. Such a circuit comprising both resistors and capacitors is called a resistor-capacitor (RC) circuit.

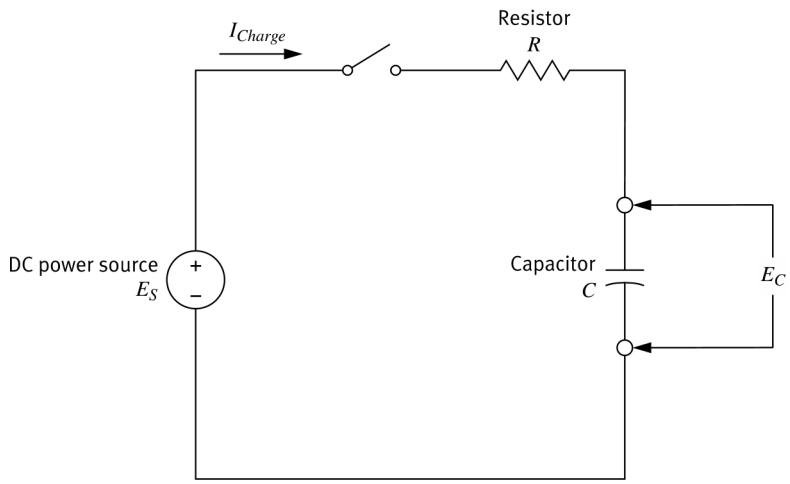

Figure 149: RC circuit during charge.

In the initial conditions, the switch is open, the current I_{Charge} is equal to 0 A and the voltage E_C across the capacitor is equal to 0 V. When the switch is closed, a current begins to flow in the circuit and the voltage E_C across the capacitor begins to increase. (a) of the following figure shows the voltage E_C across the capacitor as a function of the charge time t, while (b) of the following figure shows the charge current I_{Charge} flowing in the circuit as a function of the charge time t.

Note that the time in the graphs is expressed as a multiple of a time constant. This time constant τ indicates the time required to charge the capacitor to 63% of the source voltage E_S, and can be calculated using the following equation:

© Festo Didactic

$$\tau = RC \tag{7}$$

where τ is the time constant of the RC charging circuit, expressed in seconds (s)

R is the equivalent resistance of all resistors in the RC charging circuit, expressed in ohms (Ω)

C is the equivalent capacitance of all capacitors in the RC charging circuit, expressed in farads (F)

As the graphs in the following figure show, the voltage E_C across the capacitor increases very rapidly in the first portion of the charge, then stabilizes as it reaches a value close to 100% of the source voltage E_S. Meanwhile, the charge current I_{Charge} decreases very rapidly in the first portion of the charge, then stabilizes as it reaches a value close to 0% of the initial current I_0.

It is generally accepted that a capacitor is fully charged after a charge length of 5τ, since the capacitor voltage E_C at this moment is virtually equal to the source voltage E_S and the charge current I_{Charge} is virtually equal to 0 A. Knowing the above relationships as well as Equation 7, it is thus possible to select the resistors and capacitors to add to an RC charging circuit in order to adjust the charging time of the capacitor(s) as required.

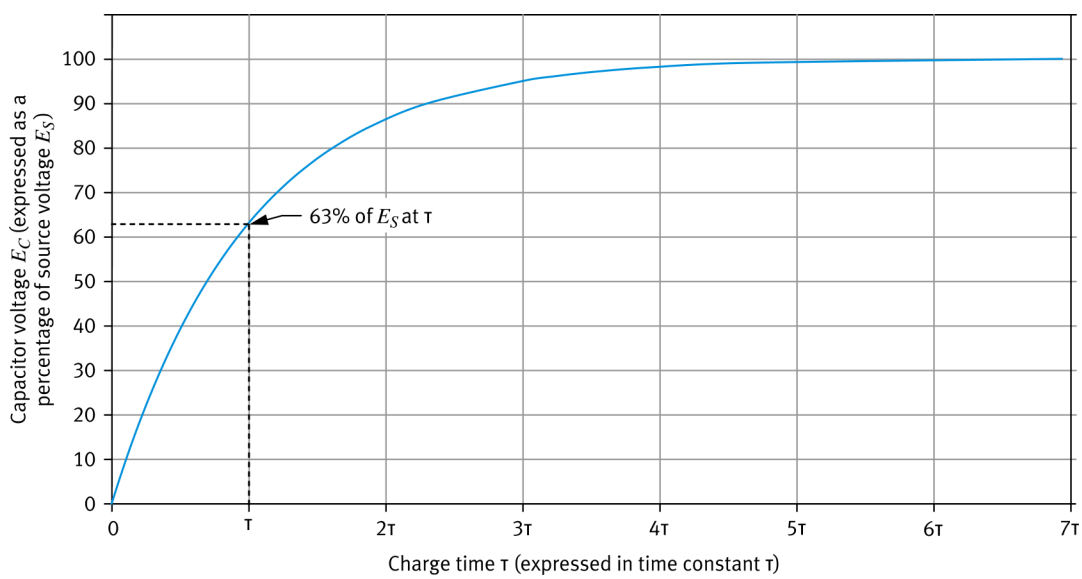

(a) Capacitor voltage E_C as a function of the charge time

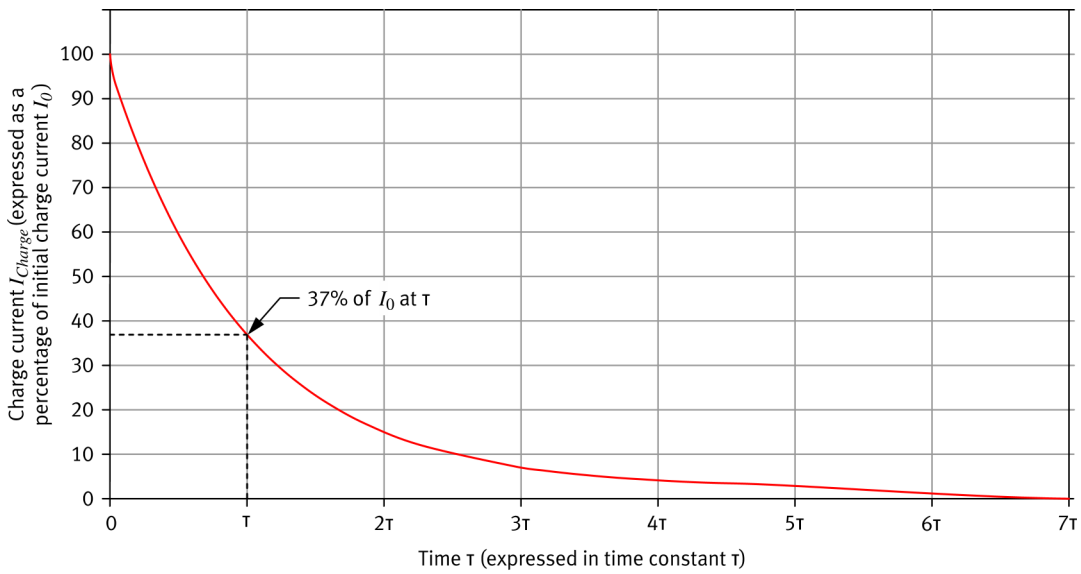

(b) Charge current I_{Charge} as a function of the charge time

Figure 150: Capacitor voltage E_C and charge current I_{Charge} as a function of the charge time.

Discharging the RC circuit

Once the capacitor in an RC circuit is fully charged, it is possible to discharge it. This can be achieved, for example, by disconnecting the dc power source (thus removing it), as shown in the following figure.

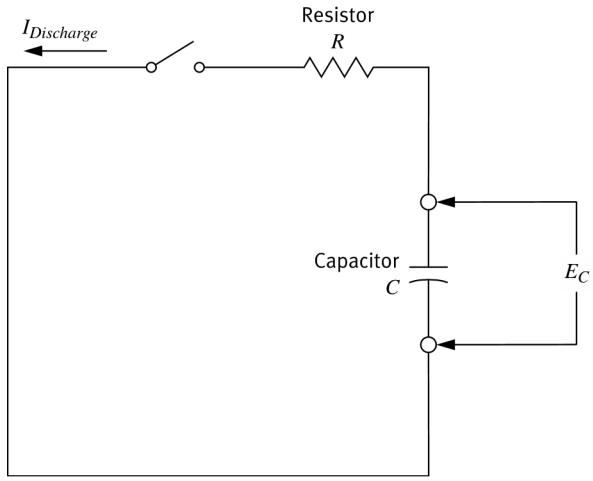

Figure 151: RC circuit during discharge.

© Festo Didactic

As soon as the dc power source is disconnected, the capacitor begins to act as the power source and applies the capacitor voltage E_C to the circuit. Because of this, a discharge current $I_{\text{Discharge}}$, whose polarity is inverted in relation to the charge current I_{Charge}, begins to flow in the circuit. (a) of the following figure shows the voltage E_C across the capacitor as a function of the discharge time t, while (b) of the following figure shows the discharge current $I_{\text{Discharge}}$ flowing in the circuit as a function of the discharge time t.

As the graphs show, the voltage E_C across the capacitor decreases very rapidly in the first portion of the discharge, then stabilizes as it reaches a value close to 0% of the initial discharge voltage E_0 (which is equal to the source voltage E_S during the charge, if the capacitor is fully charged). Conversely, the discharge current $I_{\text{Discharge}}$ decreases very rapidly in the first portion of the charge, then stabilizes as it reaches a value close to 0% of the initial current I_0.

Just as during charge, it is generally accepted that a capacitor is fully discharged after a discharge length of 5τ, since the capacitor voltage E_C at this moment is virtually equal to 0 V and the discharge current $I_{\text{Discharge}}$ is virtually equal to 0 A.

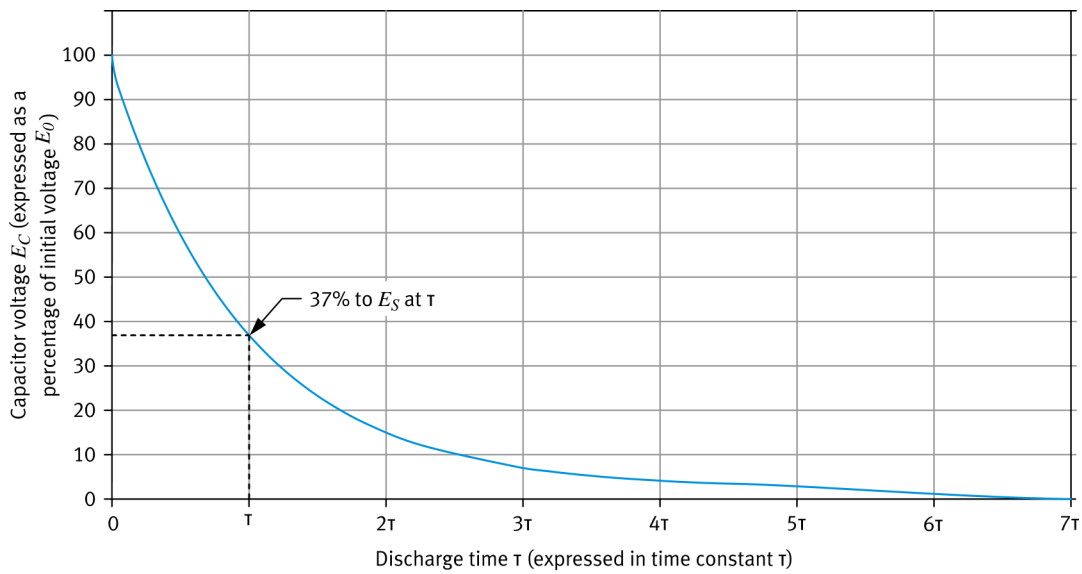

(a) Capacitor voltage E_C as a function of the discharge time

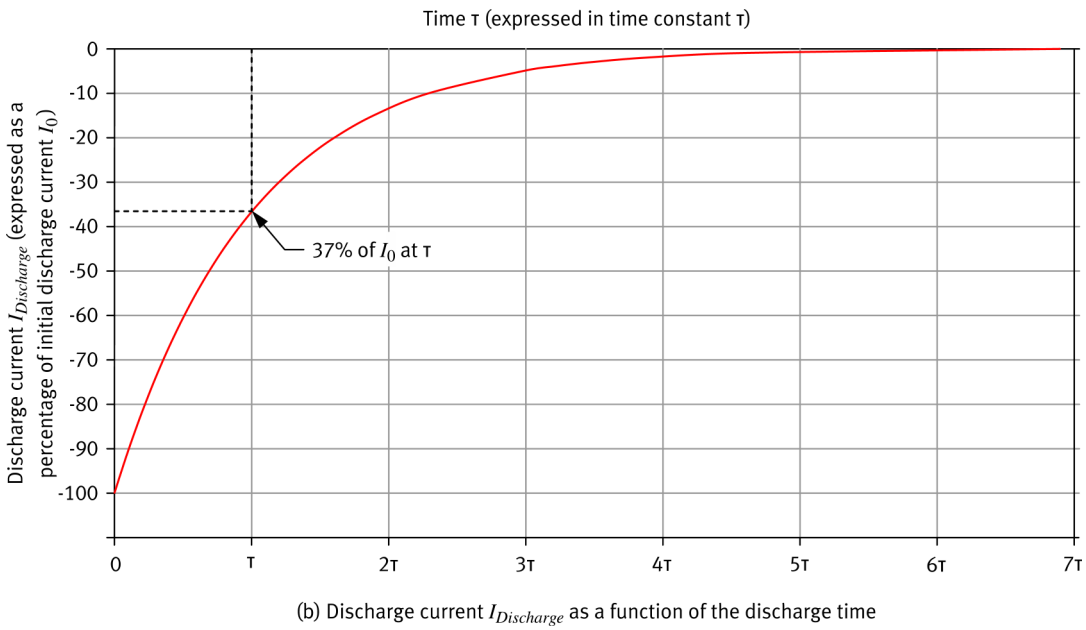

Figure 152: Capacitor voltage E_C and discharge current $I_{\mathrm{Discharge}}$ as a function of the discharge time.

Electrical circuit

Capacitors are often used in dc circuits in order to store energy. This is done by charging the capacitor up to a certain voltage value. The capacitor can then be used as a momentary dc power source by connecting its terminals to a load. This principle is used effectively in all kinds of photo flashes, where the electrical energy stored in the capacitor discharges in a very short length of time in the flashbulb.

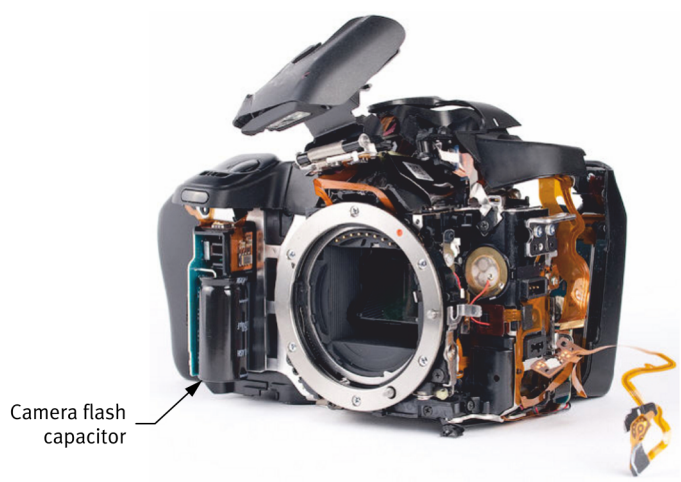

Figure 153: Camera taken apart showing the capacitor used to power the camera flash. The capacitor is the component with a cylindrical shape.

© Festo Didactic

Due to their capacity to oppose voltage changes, dc capacitors can also be used to absorb temporary rises in voltage in a circuit. For example, in a circuit without a capacitor, a sudden voltage increase would cause a high current to flow in the circuit, thus potentially damaging the equipment. If a capacitor were added, however, it would absorb part of the voltage increase. The excess electrical energy stored in the capacitor in this manner could later be discharged harmlessly in a secondary circuit if required.

Finally, RC circuits are often used in different types of timer circuits, such as time-delay relays. In these applications, the time required to charge and discharge the capacitors in the RC circuit is used in order to define the operating and charge times of a load.

Figure 154: Capacitors are found in all sizes and shapes.

Training system component: the capacitor

The AC/DC Training System includes two capacitors with each a capacitance of 8.8 µF and a tolerance of 3%, as well as a larger capacitor with a capacitance of 4950 µF and a tolerance of 20%. The capacitors also have a voltage rating of 230 V, which means that the voltage applied to the capacitor terminals should not exceed 230 V. Doing otherwise could damage the capacitors.

Procedure outline

The Procedure is divided into the following sections: